1- Tail gear / Heckspornrad

FUSELAGE - REAR - BOTTOM VIEW
UNTERSICHT

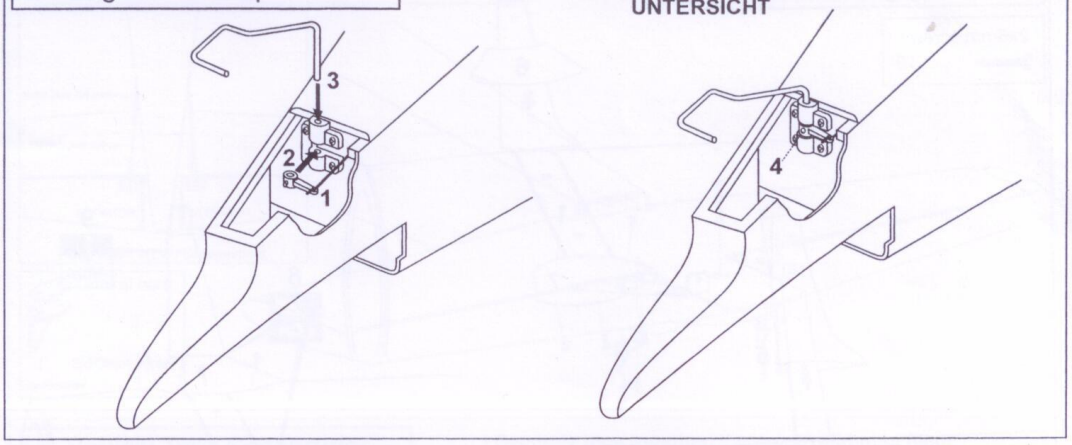

6- Tail gear / Heckspornrad

FUSELAGE - REAR - BOTTOM VIEW
UNTERSICHT

2.5mm collar 2
2x6mm screw 3

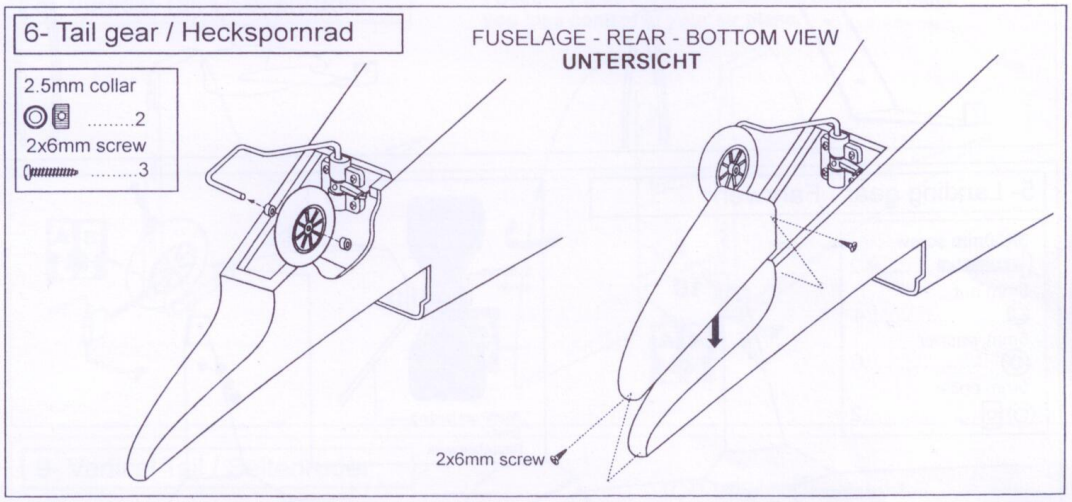

3- Landing gear / Fahrwerk

5X50mm screw 2
3x10mm screw 4

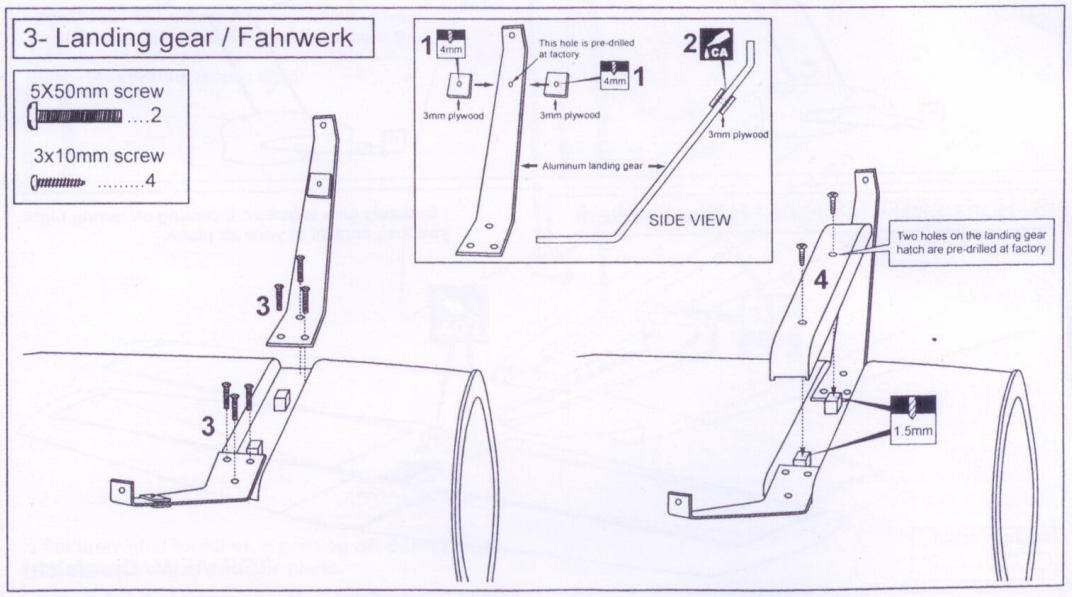

4- Landing gear / Fahrwerk

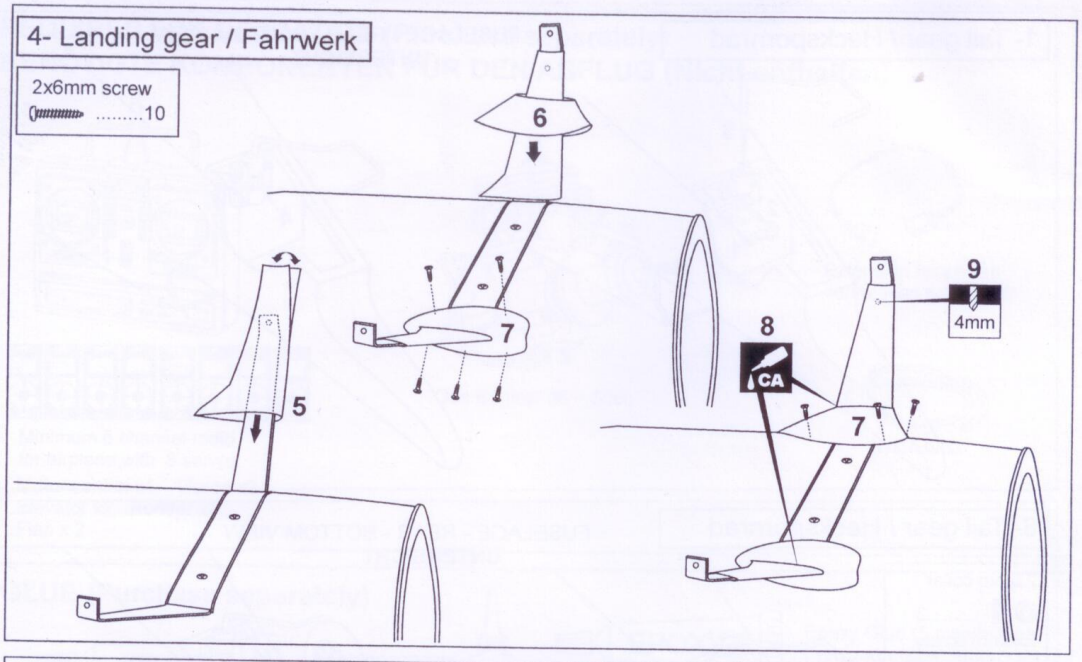

5- Landing gear / Fahrwerk

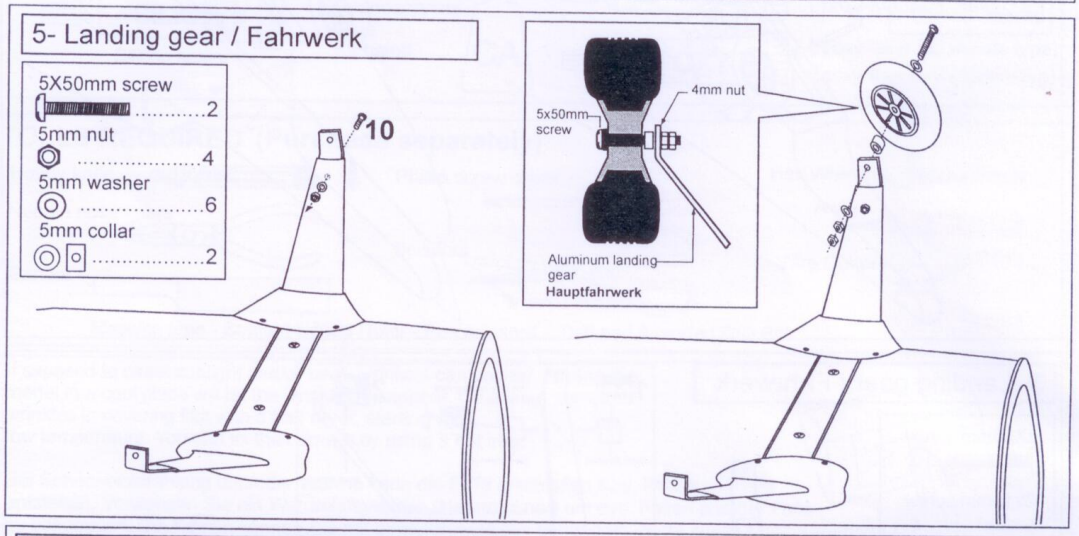

6- Horizontal Stabilizer / Höhenleitwerk

! Securely glue together. If coming off during flight, you lose control of your air plane.

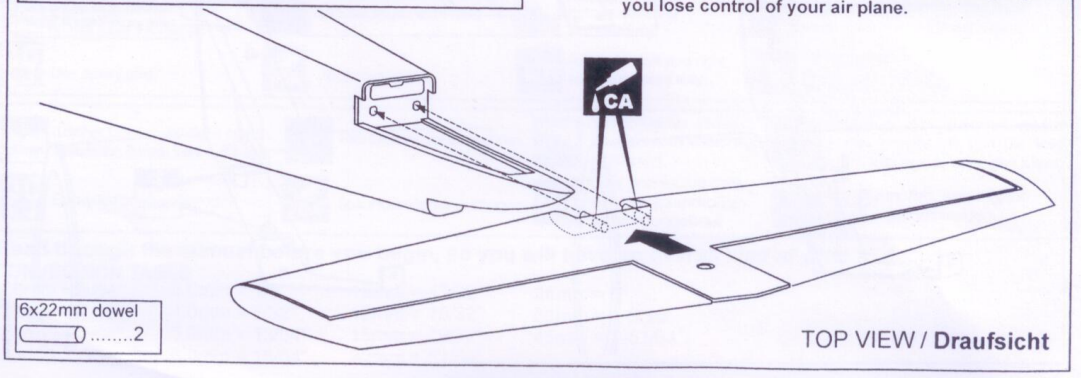

7- Horizontal Stabilizer / Höhenleitwerk

TOP VIEW / **Draufsicht**

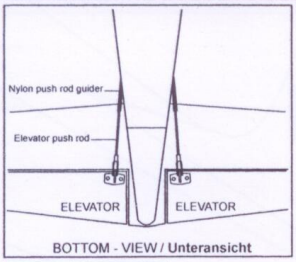

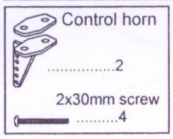

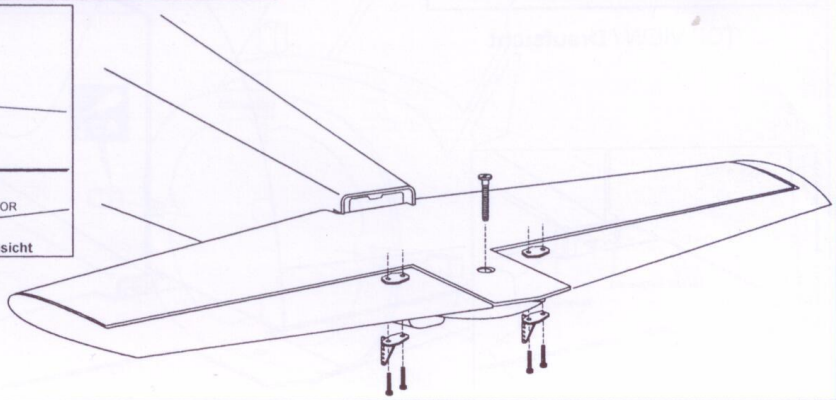

8- Vertical Tail / Seitenruder

! Securely glue together. If coming off during flight, you lose control of your air plane.

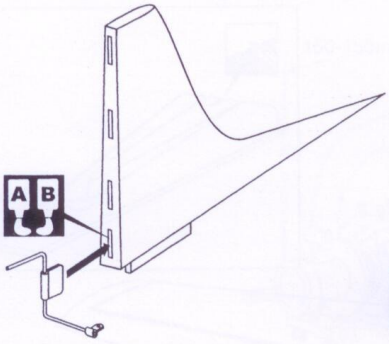

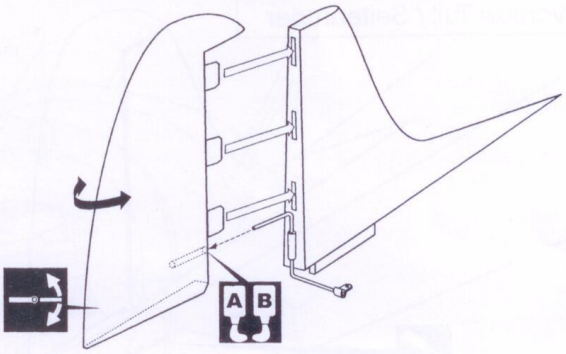

9- Vertical Tail / Seitenruder

*** WARNING: When removing any covering from the airframe, please ensure that you secure the cut edge with CA or similar cement. This will ensure the covering remain tight.**

TOP VIEW / **Draufsicht**

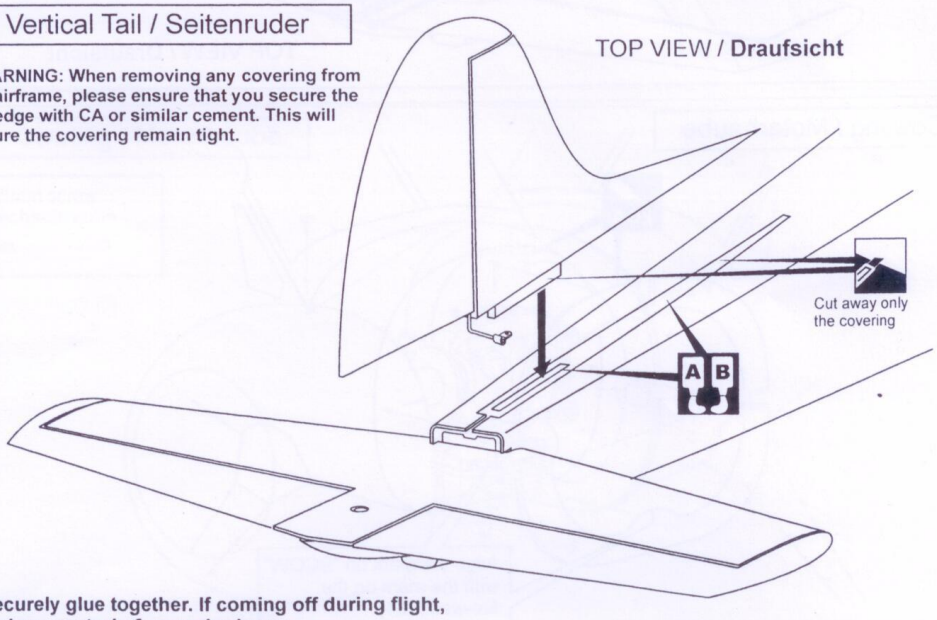

! Securely glue together. If coming off during flight, you lose control of your air plane.

10- Vertical Tail / Seitenruder

TOP VIEW / **Draufsicht**

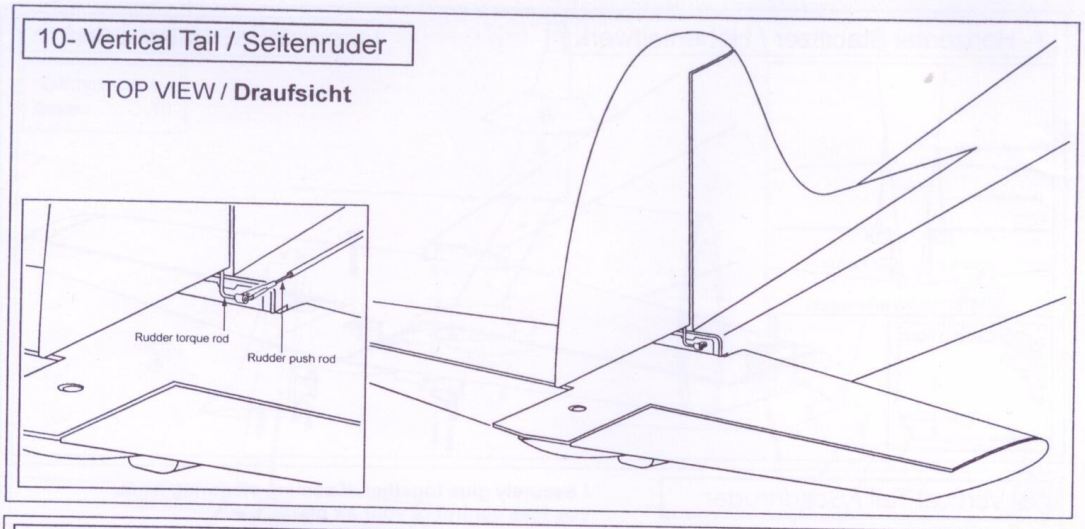

11- Vertical Tail / Seitenruder

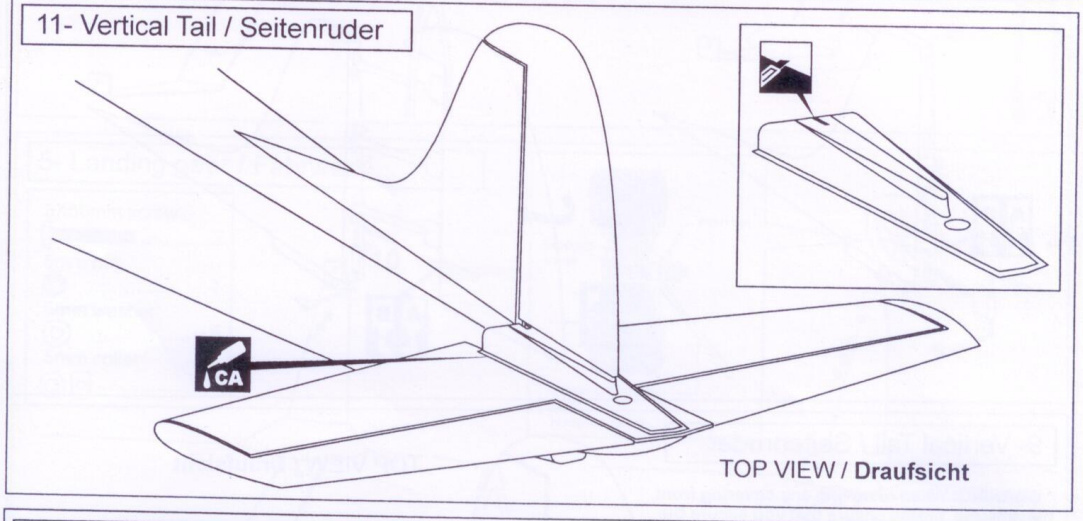

12- Cowling / Motorhaube

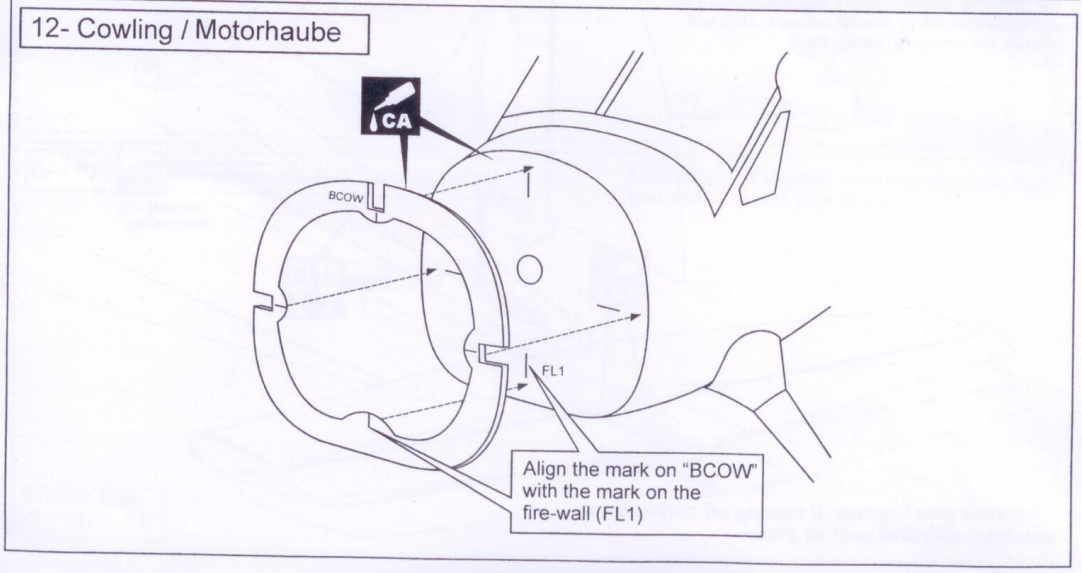

13- Cowling / Motorhaube

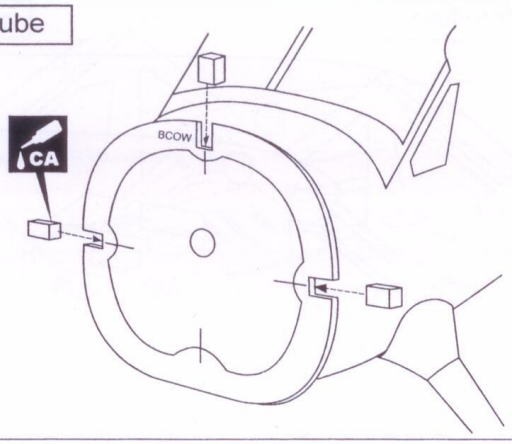

14- Engine / Motoreinbau

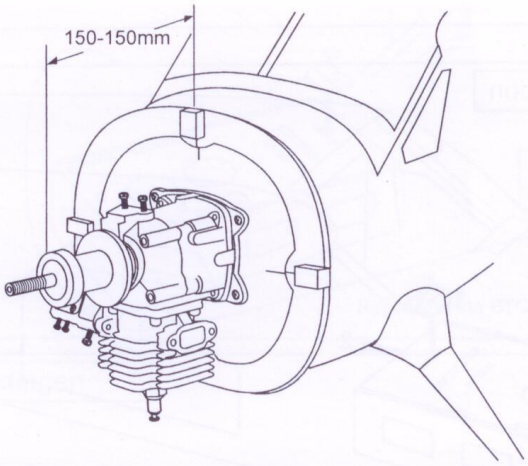

15- Cowling / Motorhaube

3x8mm screw
Blechschraube
.....3

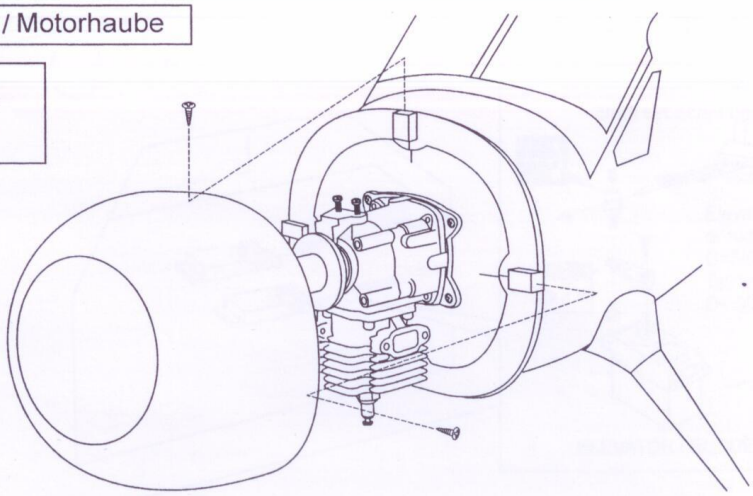

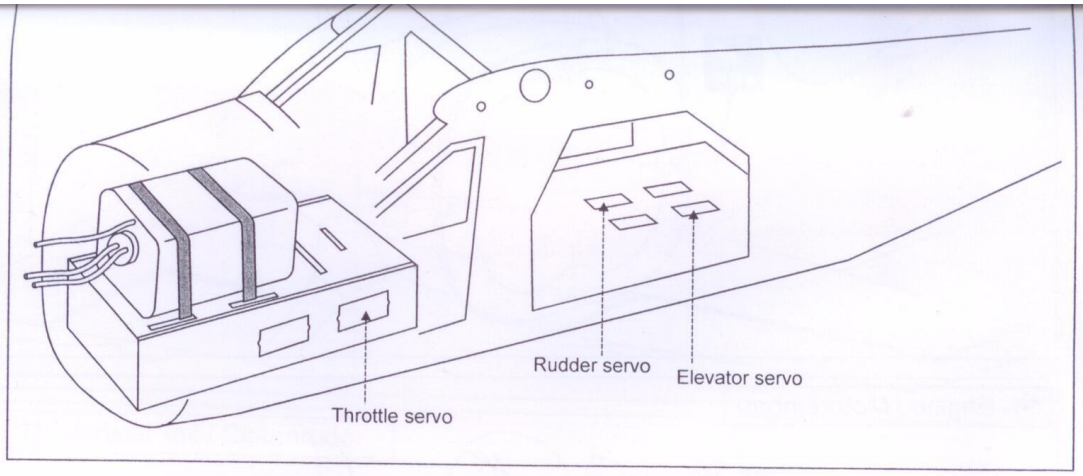

17- Battery installation

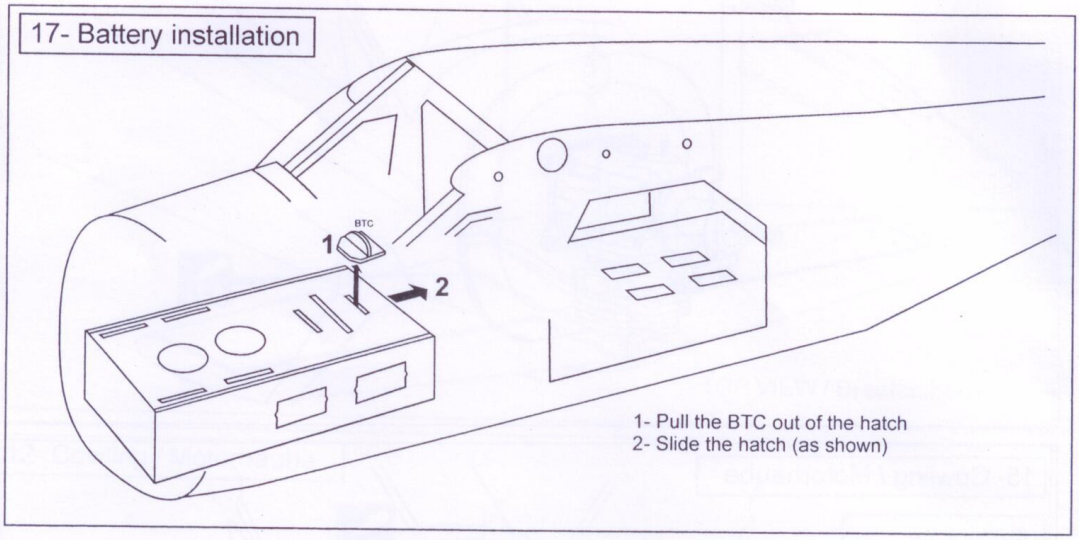

18- Battery installation

1- Install the LI-po battery into the box.
2- Pull the hatch (as shown).

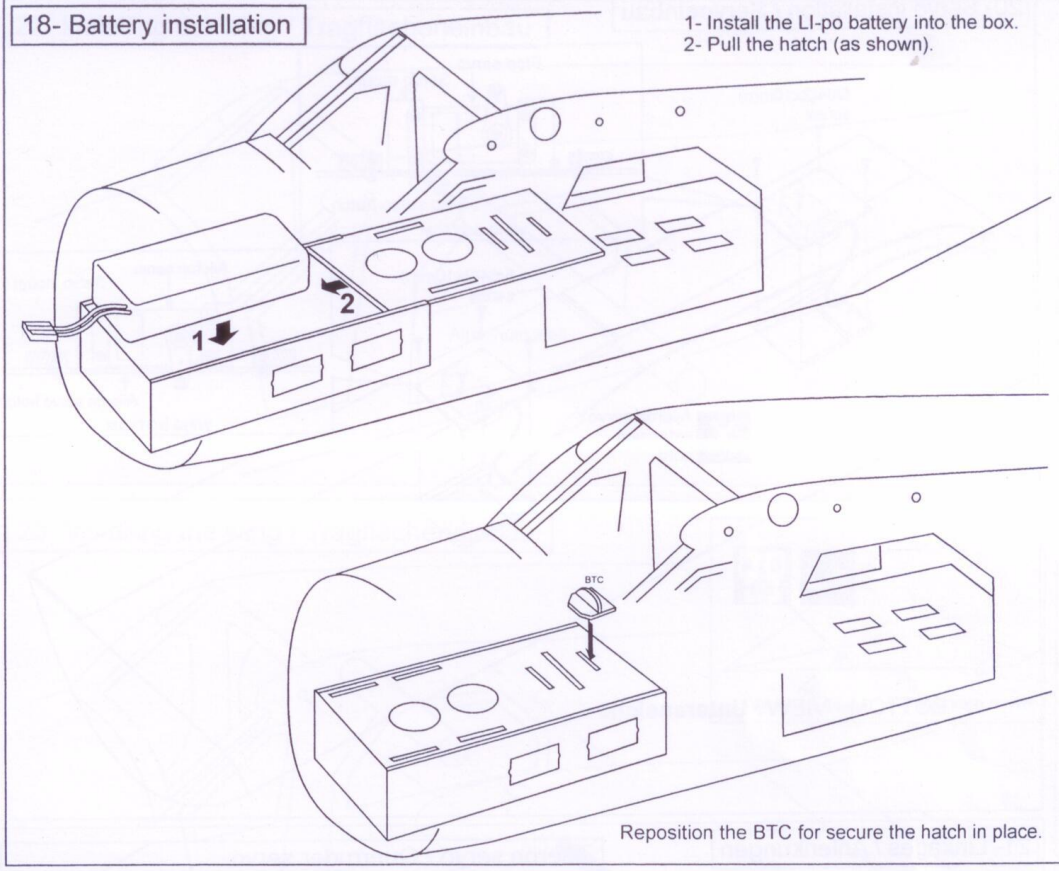

Reposition the BTC for secure the hatch in place.

19- Linkage / Anlenkungen

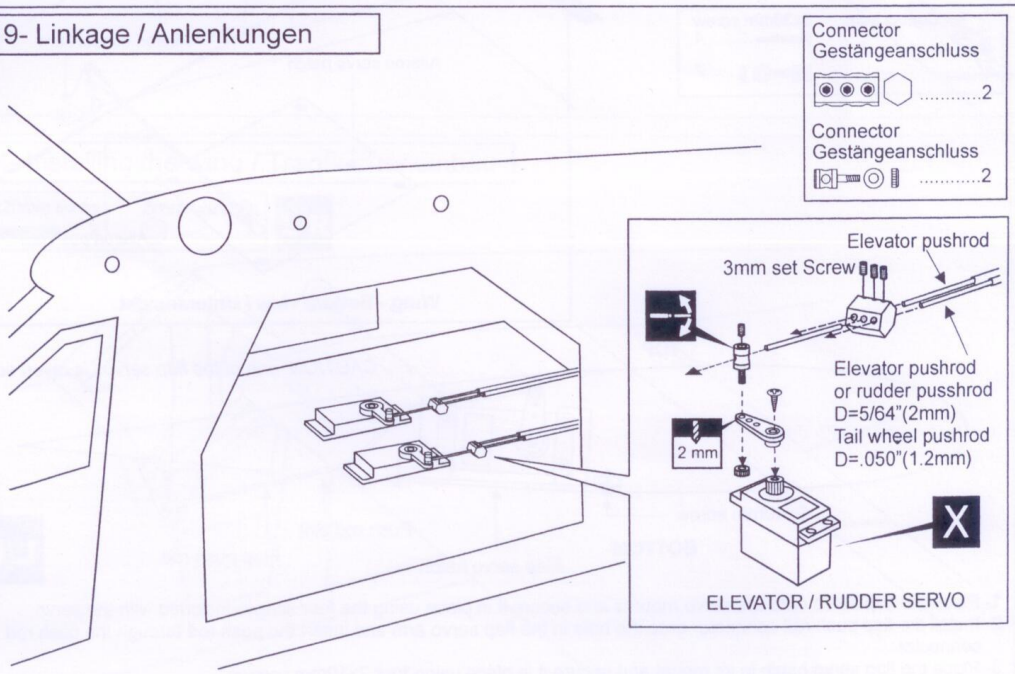

20- Servo installation / Servoeinbau

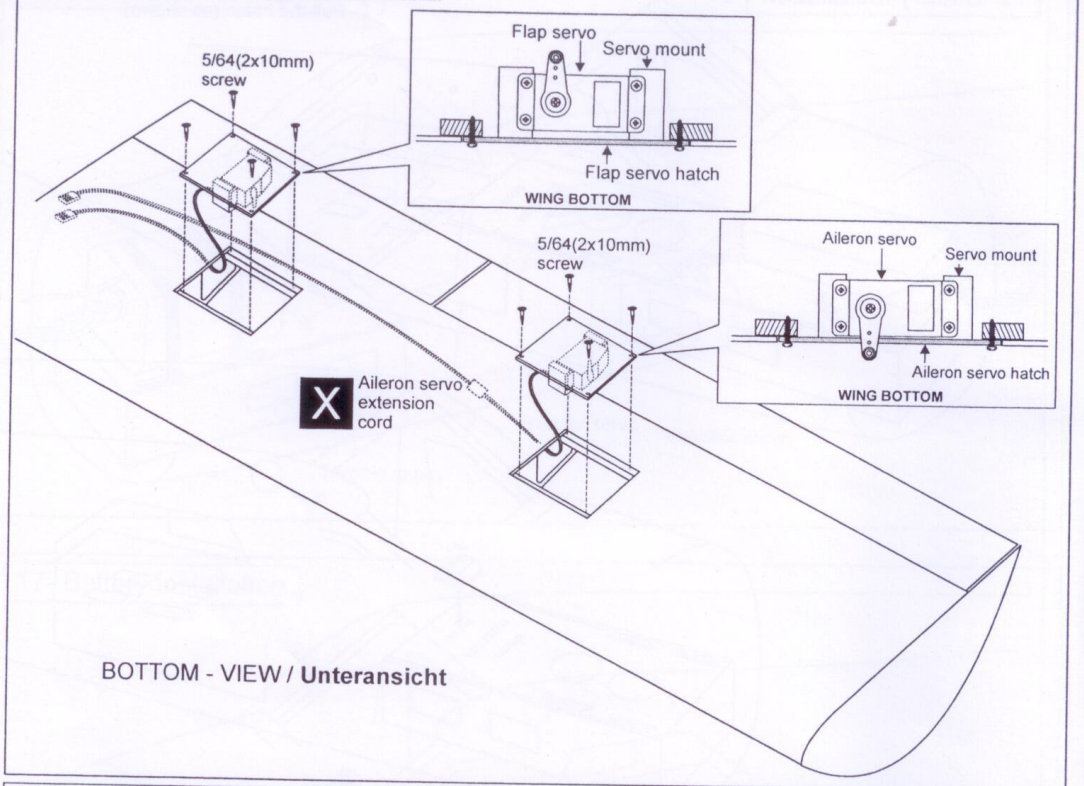

21- Linkages / Anlenkungen

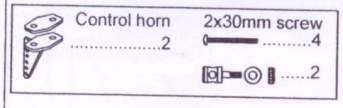

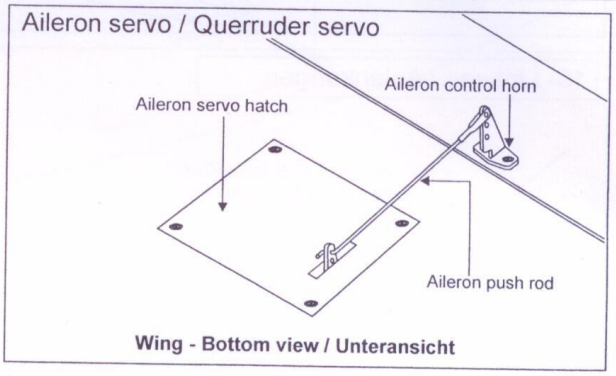

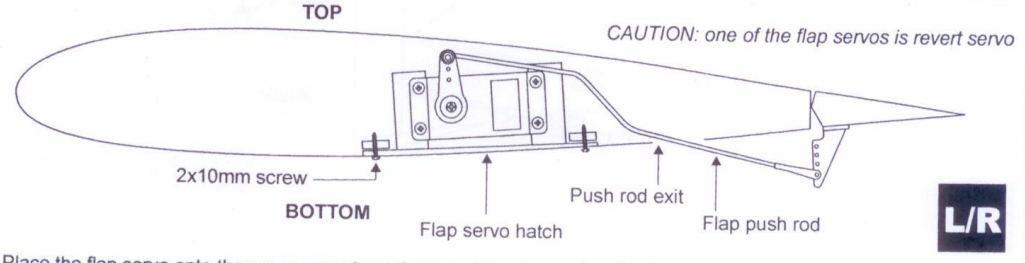

1- Place the flap servo onto the servo mounts and secure it in place using the four screws included with the servo.
2- Install the flap push rod connector onto the hole in the flap servo arm and insert the push rod through the push rod connector.
3- Place the flap servo hatch in its mount and secure it in place using four 2x10mm screws.

22- Installing the wing / Tragflächeneinbau

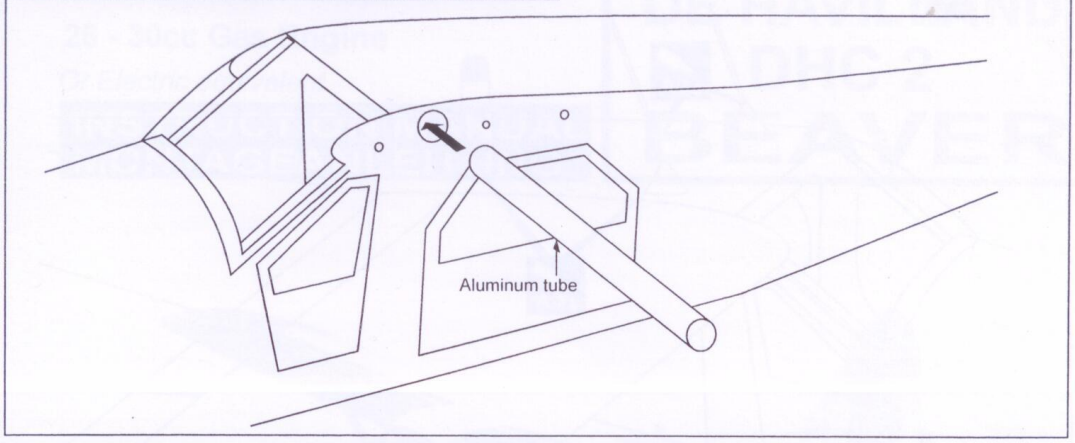

23- Installing the wing / Tragflächeneinbau

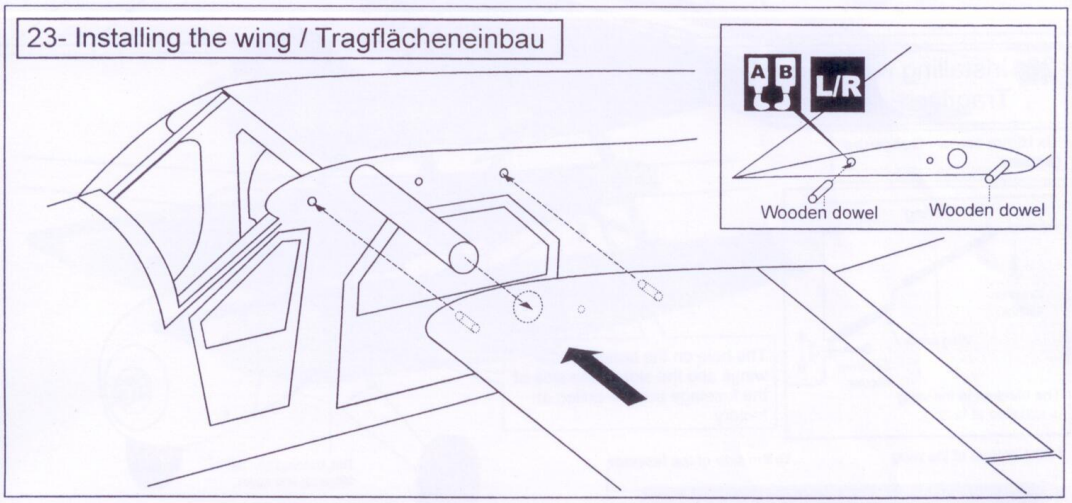

24- Installing the wing / Tragflächeneinbau

5x20mm screw 2
5mm washer 2
L/R

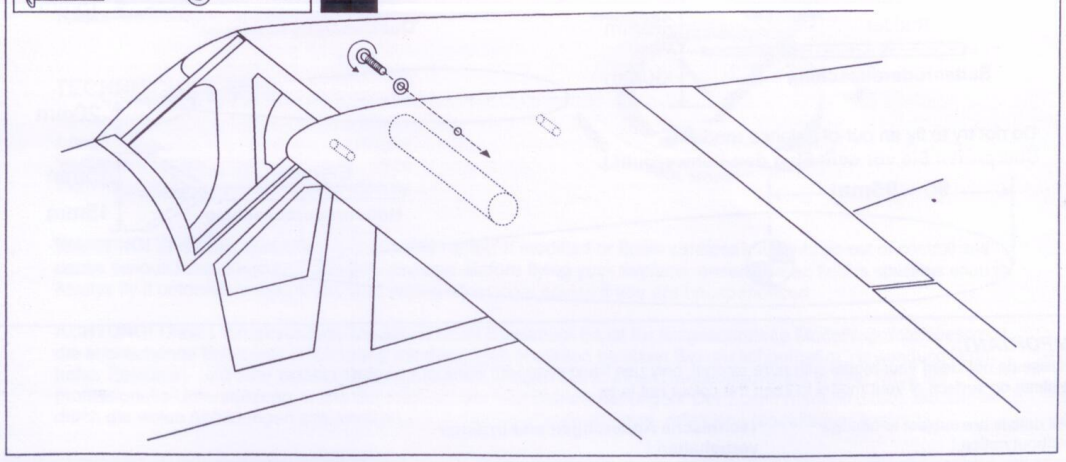

25- Decor / Aufkleber

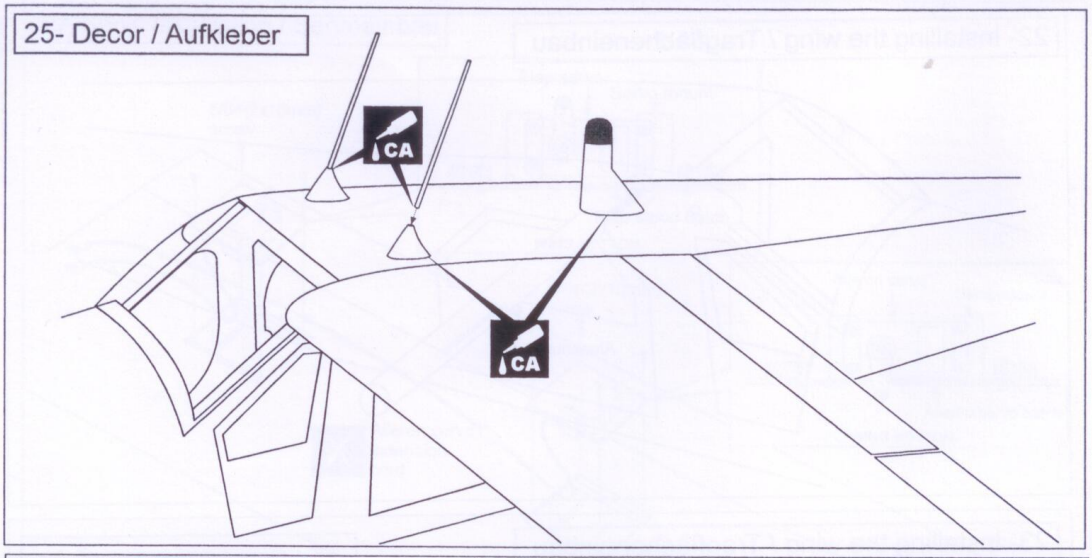

26- Installing the wing
Tragflächeneinbau

3x15mm screw / **Schraube** 2

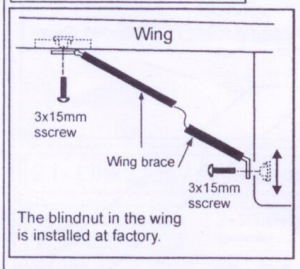

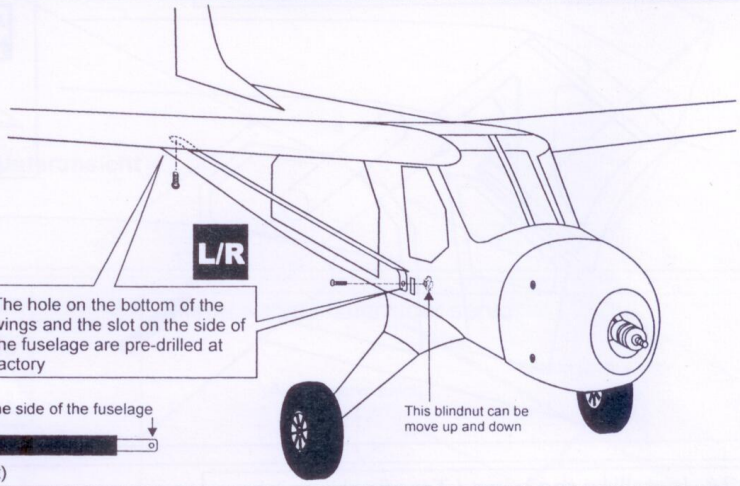

To the bottom of the wing

To the side of the fuselage

Wing brace (right - left)

27- Balance / Schwerpunkt

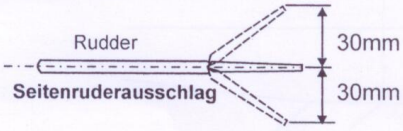

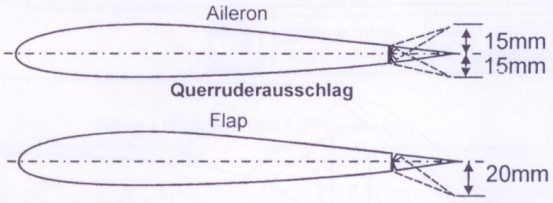

Do not try to fly an out-of balance model!
Überprüfen Sie vor dem Flug den Schwerpunkt.

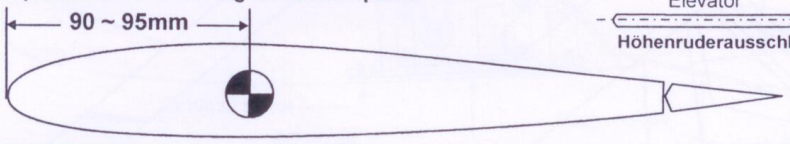

IMPORTANT:
Please do not clean your model with pure alcohol, only use liquid soap with water or use glass cleaner to clean on surface of your model to keep the colour not fade.

All details are subject to change without notice !

Technische Änderungen und Irrtümer vorbehalten !